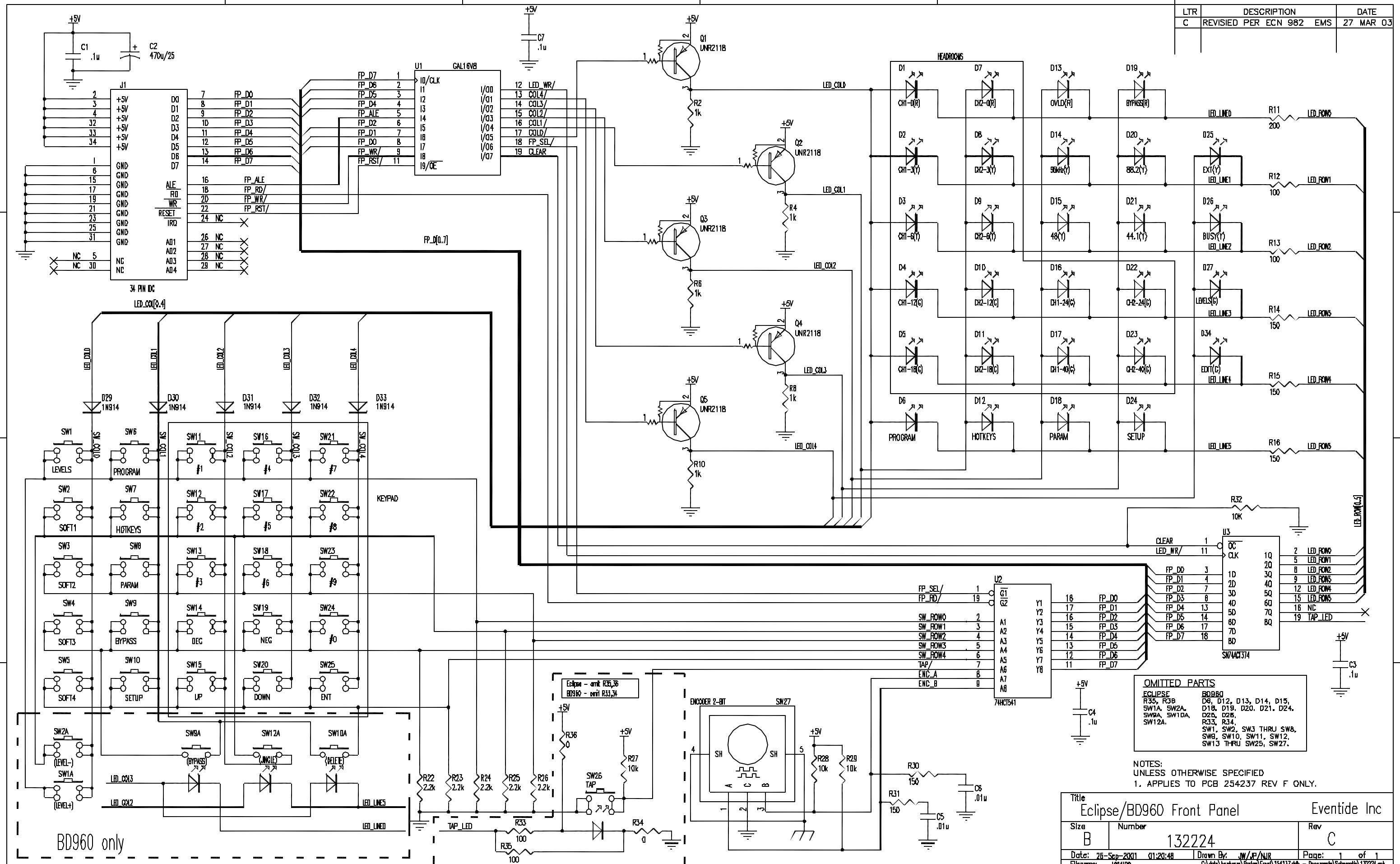LTR	DESCRIPTION	DATE
C	REVISIED PER ECN 982 EMS	27 MAR 03